Operating instructions

TWIN piston compressors

TWIN piston compressors, wheeled

Type	
Serial number	Date

Rev.A 102620 05/11

EC Declaration of Conformity

according to EC directive 2006/42/EC on machinery (Annex II A)

Name and address of the manufacturer

BlitzRotary GmbH
Hüfinger Str.55
78199 Bräunlingen, Germany

Hier Typenschild einkleben

Typ

Baujahr

Seriennummer

This declaration relates exclusively to the machinery in the state in which it was placed on the market, and excludes components which are added and/or operations carried out subsequently by the final user. The declaration is no more valid, if the product is modified without agreement.

Herewith we declare, that the machinery described below

product denomination	**Piston Compressor**
model / type	
VARIS	VDZ; VDZH; VDZS; VDZHS; VDZD; VDZHD; VGZ; VGZH; VZ; VZH
VERSA	DZ; DZH; DZS; DZHS; GZ; GZH; DZHP; GZHP; HV; NV; DZNT; DZNDT; GZNT; GKTE; GKTZ; GKTZH
TWIN	Airmobil; Airstation; Hobby; Maximat; Maximat Pro; Kitty II; Whisper; Medicus; VX DKD; DET; DEDT; GET; BKE; BKZ; BKES; BKZS; GKE; GKZ
FORMULA	28M; 36M; 57M; 38H; 52H; 65H; 38V; 52V; 65V
TOURING	GT30H; GT42H; GT50H; GT32V; GT42V; GT50V;

machinery- / serial number .....
Year of manufacture .....

is complying with all essential requirements of the Machinery Directive 2006/42/EC.
In addition the partly completed machinery is in conformity with the EC Directives 2004/108/EC relating to electromagnetic compatibility and 2006/95/EC relating to electrical equipment (Protection objectives have been met in accordance with Annex I No. 1.5.1 of the Machinery Directive 2006/42/EC)

In addition the partly completed machinery is in conformity with the EC Directives 2009/105/EC relating to simple pressure vessels directive.

Harmonised Standards used

EN 1012-1 : 2010	Compressors and vacuum pumps - Safety requirements - Part 1
EN 60204-1: 2006+7/2007	Safety of machinery - Electrical equipment of machines - Part 1
EN ISO 12100-1 : 2003	Safety of machinery - Basic concepts - Part 1
EN ISO 12100-2 : 2003	Safety of machinery - Basic concepts - Part 2
EN ISO 14121-1 : 2007	Safety of machinery - Risk assessment - Part 1

Other technical standards and specifications used:

The person authorised to compile the relevant technical documentation:
BlitzRotary GmbH; Hüfinger Str. 55, 78199 Bräunlingen

Place : Bräunlingen
Date : 21.03.2011

Carsten Rohde
Geschäftsführer / Managing Director

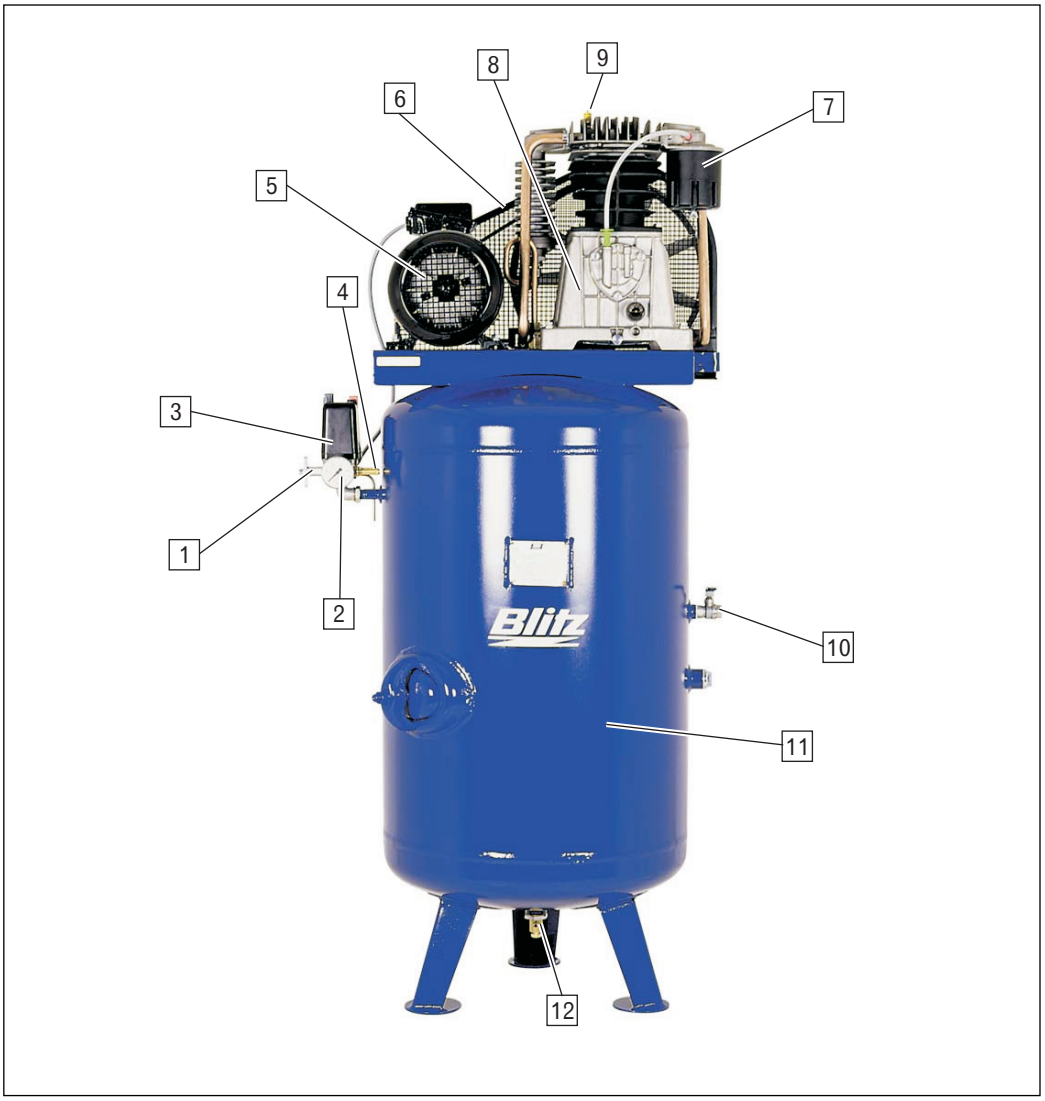

Abb. 1: Component overview

1 Test flange
2 Pressure gauge
3 Pressure switch (operating switch)
4 Safety valve – ultimate pressure
5 Motor
6 Belt guard
7 Suction filter
8 Compressor aggregate
9 Safety valve – intermediate pressure
10 Compressed air outlet
11 Compressed-air reservoir
12 Condensation water drain

Operating instructions
Index, Inspection and servicing

Index

Component overview

1 Fundamental safety instructions 1
1.1 Designated use 1
1.2 Fundamental measures 1
1.3 Description of symbols and notes 1

2 Transport and storage 2
2.1 Transport 2
2.2 Storage 2

3 Mounting 2
3.1 Mounting conditions 2
3.2 Compressed-air port 3
3.3 Electrical connection 3

4 Operation 5
4.1 Safety instructions 5
4.2 Switching the unit on 5
4.3 Daily check-ups 5
4.4 Switching the unit off 5
4.5 Original BLITZ accessories 5

5 Inspection and servicing 6
5.1 Safety instructions 6
5.2 Checking and topping up the oil level . 7
5.3 Changing the oil 7
5.4 Draining the condensation water 8
5.5 Checking and changing the suction filter cartridge 8
5.6 Tighten the screw connections. 8

6 Maintenance schedule 9

7 Trouble shooting 10

Technical annex

1 Fundamental safety instructions

1.1 Designated use

The compressor system is intended exclusively for the generation of compressed air. Any other use shall be considered an undesignated use.

1.2 Fundamental measures

- Never point compressed air at persons.
- Observe these operating instructions.
- Keep these operating instructions available at the location of use at all times.
- Observe the regular maintenance deadlines (cf. chapter 6 “Maintenance plan”).
- Use original BLITZ parts and approved operating material only.
- Do not use compressed air for breathing without corresponding treatment.
- Do not modify the system.
- Use mounting parts and devices downstream from the compressor which have been designed for the maximum operating overpressure of the compressor.
- In your capacity as proprietor, please ensure that all safety regulations are observed by the operating staff.
- Do not use the compressor as a climbing aid.

1.3 Description of symbols and notes

Danger
Mortal danger and risk of injury.

Caution
Damage to property.

Information and tips.

2 Transport and storage

2.1 Transport

Danger
Mortal danger caused by incorrect transport.

- Never lift the compressor by the fan cover.
- Only use suitable lifting gear with the corresponding weight-bearing capacity (for data on weight, please refer to chapter “Technical annex”).
- Fasten and secure the system with belts at the corresponding points.
- Secure swivelling and loose parts.
- Transport the compressor by means of crane hooks, fork-lift truck and elevating truck only.
- Never remain under suspended loads.
- Depressurise the compressor prior to any transport.

2.2 Storage

Store the compressor in a dry location protected against weather influence. Ambient temperature: -10° C to +50° C.

Please order the BLITZ conservation instructions in case of storage of over six months.

3 Mounting

3.1 Mounting conditions

➔ Check the compressor for damage during transport.

Ambient conditions

Danger
Mortal danger and explosion hazard when caustic, inflammable or poisonous gases are drawn in.

- Do not operate the compressor in explosive surroundings or in the vicinity of open flames and flying sparks.

Caution
Wrong mounting will cause damage to the compressor.

- Ensure sufficient ventilation of the compressor room.
- Do not operate the compressor in the open.

The space between the compressor and the wall has to be at least 40 cm (cf. Fig. 2: Location). The compressor has to be easily accessible from all sides. The ambient temperature has to be between 5° C and 40° C.

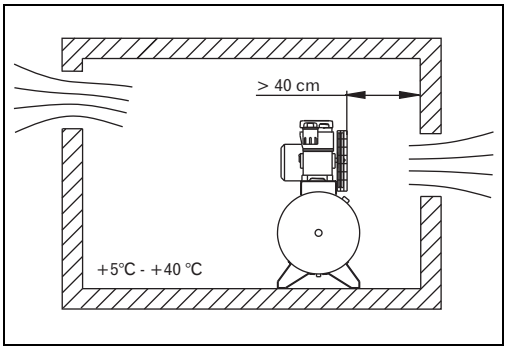

Abb. 2: Location

Ground

➔ Place the compressor on a horizontal and plane surface.

The ground has to have a suitable load-bearing capacity. BLITZ offers special solutions for inclined surfaces.

BLITZ recommends the use of rubber-metal connections to prevent vibrations.

3.2 Compressed-air port

The connection to the compressed-air ductwork system may be carried out only by trained experts or by staff members of BLITZ Company.

Danger
Danger of injury by pressure in the pipes.
- Vent the pipes to which the compressor is connected.

Use a flexible hose to connect the compressor to the supply network. Thus, stress cracks and sound bridges are prevented.

Observe the technical data for the connection of compressed air (cf. chapter “Technical annex”).

3.3 Electrical connection

The connection to the electrical power system may be carried out only by adequately trained expert.

Danger
Mortal danger caused by electric voltage.

Compressor systems have to be fitted with a power switch or a plug connection to interrupt the power supply. Compressor systems with a motor capacity of more than 3 kW or 16 Amps have to be fitted with a lockable power switch and upstream fuses.

In this respect, please refer to the circuit diagram in the chapter titled “Technical annex” or in the switch cabinet as well as to the following connection conditions.

Checking the rotating direction

Caution
Fire hazard and damage to compressor in case of wrong polarisation of the motor.
- Carry out the check of the rotating direction as described below:

➔ Please refer to chapter 4.2 titled “Switching the unit on”.
➔ Briefly switch the operating switch on and off. The correct rotating direction of the fan has been marked by an arrow on the fan cover.
➔ Change the poles of the electric connection of the motor in case of a wrong rotating direction.

Electrical connection conditions

The connection to the electrical power system may be carried out only by adequately trained expert.

Caution
Neither overvoltage nor undervoltage should be exceeded by 10%.

This unit is intended for operation on a power supply network with a maximum system impedance Z_{max} at the interconnection point (house service line), which is listed in the table below in dependence of the performance. The user shall have to ensure that the unit is operated only on a power supply network which meets these requirements. If and when necessary, the local power supply company can provide information on the system impedance.

	400V-50Hz 3 Ph.				230V-50Hz 1 Ph.		
Motor output	Nominal motor current	Protection – star-delta start	Protection – direct start	Power supply lead	Fuse	Power supply lead	Maximum system Impedance Z_{max}
kW	A	A	A	mm²	A	mm²	Ω
1,1	2,6		6	4G2.5	16	3G2.5	
1,5	3,5/4,1		10	4G2.5	16	3G2.5	-/0,254
2,2	5,0/6,0		16	4G2.5	16	3G2.5	0,127/ 0,143
3,0	6,6/8,1		16	4G2.5			0,118/ 0,106
4,0	8,5	16	20	4G2.5 5G2.5			0,072
5,5	11,5	20		5G2.5			0,177
7,5	15,5	25		5G4			0,102
11,0	22,5	35		5G6			
15,0	30,0	50		5G10			
18,5	36,0	50		5G10			
22,0	43,0	63		5G16			
30,0	58,0	80		5G25			

Tab. 1: Characteristic value for the electrical connection

The conductor cross sections mentioned are guideline values for a maximum lead length of 50 m at a temperature of 30° C. Use a time-lag fuses or “gl fuses”.

- 220 / 240 V systems require a three-core 1P/N/PE cable.
- 380 / 400 V systems require a four-core 3P/PE cable for direct start.
- 380 / 400 V systems require a five-core 3P/N/PE cable for star-delta start.

4 Operation

4.1 Safety instructions

- Never point compressed air at persons.
- Do not use compressed air for breathing without corresponding treatment.
- Use mounting parts and devices downstream from the compressor which have been designed for the maximum operating pressure of the compressor.
- Do not reach into the rotating wheels when the compressor is operational.
- Touch the compressor system at the on and off switch only during and shortly after operation. Hot surface can cause severe injuries.
- Switch the compressor off immediately in case of faults.
- Keep combustible materials away from the compressor system.
- Operate the compressor only with suction filter and closed fan cowl and/or belt guard.
- Operate the compressor only at the permissible operating pressure of the pressure reservoir.
- Tighten the screw connections of the pressure pipes.
- Wear tight-fitting work cloths when handling the compressor.
- Wear goggles and ear muffs when working with compressed air.
- Wear a hair net to protect long hair and remove any lose jewellery.
- Check the cables for damage in regular intervals.
- Keep domestic animals and children away from the compressor system.
- Switch the compressor off when not needed.
- When operating the compressor with an engine, please observe the additional safety instructions in the operating instructions enclosed.

4.2 Switching the unit on

➔ Check the oil level through the oil level inspection glass and top up the oil, if and when necessary (cf. chapter 5.2 “Checking and topping up the oil level”).
➔ Set the power switch to on or plug in the power plug.
➔ Set the operating switch to position 1 (cf. Fig. 1: Component overview).

The compressor will start up automatically when the pressure in the network is lower than the cut-in pressure set. The unit will stop automatically when the operating pressure is made in the network.

In case of faults, please refer to chapter 7 titled “Trouble shooting” for more help.

4.3 Daily check-ups

- Drain the condensation water at the compressed-air reservoir (cf. chapter 5.4 “Draining the condensation water”).
- Check the oil level of the compressor (cf. chapter 5.2 “Checking and topping up the oil level”).

4.4 Switching the unit off

➔ Set the operating switch to position 0 (cf. Fig. 1: Component overview).
➔ Set the power switch to off or remove the power plug.

4.5 Original BLITZ accessories

BLITZ offers you the following accessories: For more information, please refer to the BLITZ price list or directly to BlitzRotary GmbH.

Compressed-air filter

To clean the compressed air for special applications.

Cold or absorption drier

To prevent faults of the compressed air ductwork system, compressed-air tools, instruments and controls caused by humid air.

Automatic condensation water drain

To spare you the daily draining of condensation water.

Oil and water separator

Is fitted downstream of the condensation water drain. The separated water can be removed directly into the sewer system.

Rubber-metal connection

To reduce vibrations.

Sound-absorbing hood

To reduce noise emissions.

For more information on these and other pneumatic accessories, please refer to BLITZ. Our address is on the last page of these operating instructions.

5 Inspection and servicing

5.1 Safety instructions

The inspection and servicing may be carried out by experts or trained persons only.

- Switch the compressor off for all servicing work, and protect the unit against unintentional operation.
- Prior to any servicing work set the power switch to off or remove the mains plug.
- Use original BLITZ parts and approved operating material only.
- After having completed the servicing work tighten all screws again.
- Depressurise the compressor prior to any servicing work.
- Touch the compressor system at the on and off switch only during and shortly after operation. Permit the compressor to cool down prior to any servicing work. Hot surfaces can cause severe injuries.

5.2 Checking and topping up the oil level

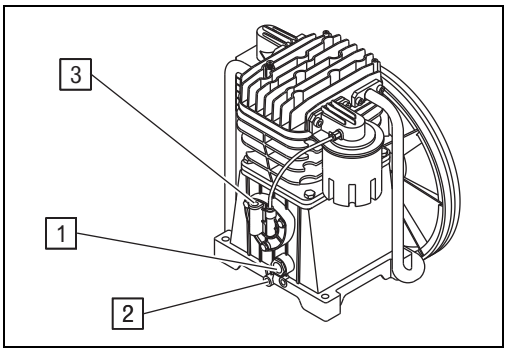

Abb. 1: Compressor aggregate

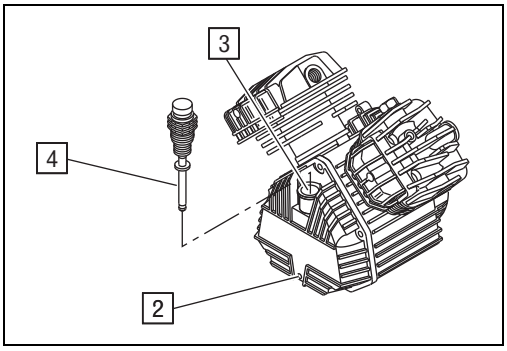

Abb. 2: Compressor aggregate

1 Oil inspection glass
2 Oil drain plug
3 Oil filler neck
4 Dipstick

Checking the oil level

- ➔ Check oil-level by means of either oil inspection glass 1 or oil dipstick 4.
- ➔ Oil-level must be within the red circle of the oil inspection glass 1 or within the markings on the oil dipstick 4.
- ➔ Check whether the oil has a milky discoloration or contains water drops (for measures, please refer to chapter 7 titled “Trouble shooting / Milky colour of the oil, water drops in the oil”).

Topping up oil

Do not mix different types of oil. Exclusively use types of oil specified by BLITZ.

- ➔ Switch the compressor off and depressurise.
- ➔ Unscrew either the oil filler neck 3 or oil dipstick 4 (cf. Fig. 3: Compressor aggregate).
- ➔ Slowly fill the oil until the oil level is either within the red circle of the oil inspection glass 1 or within the markings on the oil dipstick 4.
- ➔ Screw on the oil filler neck.

Types of oil

Given normal mounting conditions (cf. chapter 3.1 “Mounting conditions”), fill compressor oil of viscosity class VG 100 of the VDL group.

BLITZ will provide information on oil for special applications.

5.3 Changing the oil

Danger
Scalding hazard by draining hot oil.

- Slowly open the oil filler neck.
- Avoid skin contact with hot oil

Used oil has to be disposed of according to the local environmental regulations.

- ➔ Switch the compressor off and depressurise.
- ➔ Unscrew either the oil filler neck 3 or oil dipstick 4 (cf. Fig. 3: Compressor aggregate).
- ➔ Undo oil drain plug 2 in operationally warm condition.
- ➔ Drain the oil into a suitable container.
- ➔ Close the oil drain plug.
- ➔ Slowly fill new oil (cf. chapter 5.2 “Types of oil”) until the oil level in oil inspection glass 1 is within the red circle or within the markings on the oil dipstick 4.
- ➔ Screw on the oil filler neck.

5.4 Draining the condensation water

Required only in case of compressors with compressed-air reservoir.

The condensation water contains oil and has to be disposed of according to the local environmental regulations

Drain condensation water every day, if no automatic condensation water drainage system has been fitted (cf. chapter 4.5 “Original BLITZ accessories”).

- ➔ Switch the compressor off and depressurise.
- ➔ Place a suitable collecting pan below the condensation water drain on the lower side of the compressed-air reservoir (cf. Fig. 1: Component overview).
- ➔ Open condensation water drain.
- ➔ Close the condensation water drain when no liquid escapes any more.

5.5 Checking and changing the suction filter cartridge

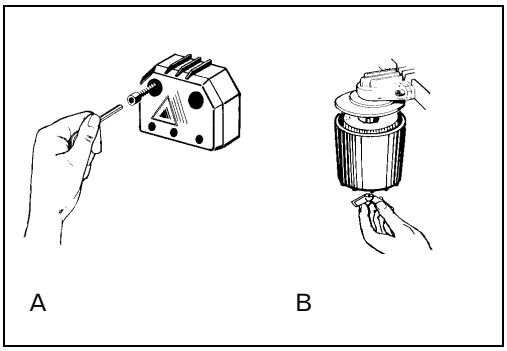

Abb. 3: Suction filter

- ➔ Depending on the model, remove the cover of the suction filter (cf. Fig. 4: Suction filter).
- ➔ In case of severe soiling, immediately replace the suction filter (cf. list of BLITZ spare parts in the chapter titled “Technical annex”).
- ➔ Refit the cover of the suction filter.

5.6 Tighten the screw connections.

- ➔ Tighten all screw connections in regular intervals.
- ➔ Tighten the screws of the cylinder head after the first one hundred operating hours.
- ➔ In doing so, observe the torque (cf. Tab.: 3: Torques).

Screw	Maximum torque
M 8	25 Nm
M 10	50 Nm
M 12	85 Nm

Tab. 2: Torques

6 Maintenance schedule

The intervals mentioned are experimental values. They can differ considerably depending on the application conditions.

Application / Interval	daily	annually	50 h	1,000 h	2,000 h	3,000 h	4,000 h	5,000 h	6,000 h	7,000 h	8,000 h	9,000 h	10,000 h	11,000 h	12,000 h
Check the oil level (cf. chapter 5.2).	●														
Change the oil (cf. chapter 5.3).		○	●	●	●	●	●	●	●	●	●	●	●	●	●
Drain the condensation water (cf. chapter 5.4).	●														
Check the suction filter cartridge and change, if and when necessary (cf. chapter 5.5).		○		●	●	●	●	●	●	●	●	●	●	●	●
Tighten the screw connections (cf. chapter 5.6).		○	●		●		●		●		●		●		●
Check the compressor valves and replace them, if and when necessary.		○			●		●		●		●		●		●
Check the check valve.		○			●		●		●		●		●		●

Measures carried out on (date):															

Measures carried out by (name):															

Key:

- ● Measure to be carried out:
- ○ Measures to be carried out, if the operating hours are not made within the time interval.

[1] Check daily in dusty conditions and replace, if and when necessary.

7 Trouble shooting

Danger
Trouble shooting may be carried out only by trained experts or by staff members of BLITZ Company. In all actions, please observe the fundamental safety instructions (cf. chapter 1), the safety instructions for operation (cf. chapter 4), and the safety instructions for maintenance (cf. chapter 5).

The compressor does not start up.

Potential reasons	Actions
No connection to network.	• Check the connection to the mains.
Fuse has blown.	• Check the electric cable, switching units and the motor. • Use time-lag fuses only. • Replace the fuse.
Network pressure is over cut-in pressure.	• Reduce the pressure in the network.
The pressure switch is defective.	• Replace the pressure switch.
The motor has broken down.	• Check the electric system and the cables. • Replace the motor.
The protective motor switch has been triggered.	• See Table “The protective motor switch has been triggered”.

The protective motor switch has been triggered.

Potential reasons	Actions
Wrong setting of the protective motor switch.	• Check the setting of the protective motor switch.
Fault at the electric connection.	• Check the electric connection for undervoltage and phase failure. • Check the conductor cross section.
Ambient temperature is too high.	• Improve the room ventilation. • Select a cooler location.
Damage on the compressor	• Check valves, crank mechanism and fan for potential damage.
The compressor is not relieved.	• Check the relief mechanism. • Check the check valve, and replace, if and when necessary.
Motor gets too hot due to high switching frequency.	• Check the pressure switching points.
The pressure switch has been set wrongly.	• Check the pressure switching points.
The clamping connections have come lose.	• Retighten the clamping connections.

The switching frequency of the motor is too high.

Potential reasons	Actions
The compressed-air reservoir is too small.	• Use a larger compressed-air reservoir.
The pressure switch has been set wrongly.	• Check the pressure switching points.
Too much condensation water in the compressed-air reservoir / compressed-air ductwork system.	• Drain the condensation water (cf. chapter 5.4). • As a preventive measure, fit an automatic condensation water drain system (BLITZ accessories).

Low delivery – the setpoint pressure is not made.

Potential reasons	Actions
Valves are defective.	• Check the valves, and replace, if and when necessary.
The suction filter is soiled.	• Clean the filter cartridge and replace, if and when necessary.
Pipes and fittings are leaking.	• Tighten the screws and fittings. • Replace the seals.
The cylinder head seal is leaking.	• Tighten the cylinder head screws. • Replace the cylinder head seal.
The piston, piston rings, and the cylinder are worn.	• Check the components. • Replace the worn parts.
The pressure switch has been set wrongly.	• Check the pressure switching points.
The air demand is higher than the delivery volume of the compressor.	• Check the air demand. • Expand the compressed air supply.

The compressor turns too hot.

Potential reasons	Actions
Ambient temperature is too high.	• Improve the room ventilation. • Select a cooler location.
The cooling air volume is not available or too low.	• The space between fan and wall is to small (cf. chapter 3.1 “Mounting conditions”). • Check the fan cowl opening for soiling, and clean, if and when necessary.
Wrong rotating direction of the fan.	• Check the rotating direction of the fan (cf. chapter 3.3 “Checking the rotating direction”).
The compressor valves are defective.	• Check the compressor valves, and replace them, if and when necessary.
The ultimate pressure is too high.	• Check the pressure switching points.

Milky colour of oil, water drops in the oil.

Potential reasons	Actions
Water in crankcase (operating temperature is not made due to short cut-in times).	• Change the oil immediately. • Retrofit a crankcase heating, if possible. • Select warmer location. • Check compressor setting.
Water in crankcase (caused by humid conditions).	• Change the oil immediately. • Select dry location.

The oil consumption is too high.

Potential reasons	Actions
The wrong oil has been used.	• Check the type of oil (cf. chapter 5.2 “Types of oil”), and replace, if and when necessary.
The piston rings and the cylinder face are worn.	• Replace the piston rings and the cylinder, if and when necessary. • Check the suction filter cartridge, and replace it, if and when necessary.
The compressor is too hot.	• See Table “Compressor turns too hot”.
Oil escapes through crankcase breather.	• Check / replace crankcase breather.

Air escapes through relief pipe when the compressor is at a standstill.

Potential reasons	Actions
The check valve is leaking.	• Check the check valve, and replace, if and when necessary.

Air escapes through the relief valve during operation.

Potential reasons	Actions
The relief valve is defective.	• Replace the relief valve.

The compressor is not relieved when switched off.

Potential reasons	Actions
The pressure switch of the relief valve is defective.	• Check the pressure switch and the relief valve, and replace, if and when necessary.

Abnormal noises

Potential reasons	Actions
“Whistling sound” caused by escaping compressed air at the cylinder head, in the supply network, at the fittings, et cetera.	• Remedy leaking points. • Replace the seals. • Tighten the screw connections.
The safety valve is “crackling”.	• Check the setting of the pressure switch. • Check the compressor valves, and replace them, if and when necessary.
Knocking sounds. Foreign bodies in the cylinder. Fan is knocking. Compressor valve. The connecting rod bearing is knocked out.	• Remove the foreign bodies; check the piston and cylinder for damage, and replace, if and when necessary. • Check whether the fan does not scrape. • Check the compressor valve, and replace it, if and when necessary. • Send the compressor to the manufacturer’s works for repair.
Grinding noises	• Damaged bearings; have the compressor repaired.

BlitzRotary GmbH

Hüfinger Straße 55
D-78199 Bräunlingen
Telefon +49.771.9233.0
Telefax +49.771.9233.99
info@blitzrotary.com
www.blitzrotary.com

A DOVER COMPANY

102620 • 05/11 • We reserve the right for technical changes.