WHEEL BALANCER

AUTOMATIC COMPUTERIZED MONITOR WHEEL BALANCER

Librak430P.3DTec Pro Touchscreen, keyboard, cone set, cone for SUV, sonar for rim width, laser scanning, ultrasonic runout sensor, passenger car, rim diameter: 10" - 30".

+ Fully automatic, computer-controlled balancing machine with pneumatic clamping device

+ Equipped with automatic wheel width sonar and rim profile laser scanner

HIGHLIGHTS IN DETAIL

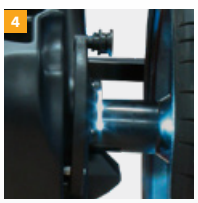

1 In automatic balancing mode, the machine automatically selects the balancing program and scans the rim profile for optimum weight positioning. The number of spokes is also determined automatically.

2 With external rim measuring sonar for automatic detection of the rim width.

3 The machine stops automatically in the unbalance position wheel outside with electric brakes. With aluminium program with adhesive weights directly divided behind the spokes.

4 LED lighting of the rim

5 Electronic balancing machine with pneumatic clamping device

GENERAL ACCESSORY PARTS ON REQUEST

+ Standard wheel lift
+ Precision flange
+ See pricelist

Librak430P.3DTec Pro

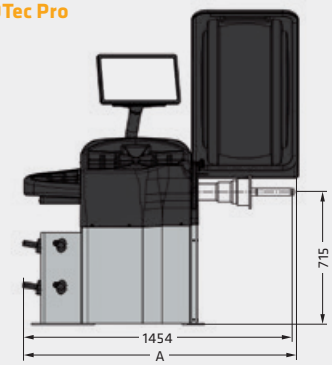

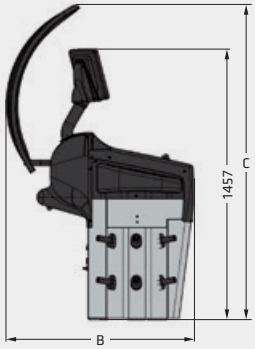

	Model	Librak430P.3DTec Pro
	Measuring speed	< 100 U/min
	Measuring time	6 s
	Balancing accuracy	+/- 1 g
	Rim width	1.5" - 22"
	Rim diameter	10" - 30"
	Wheel diameter max.	1120 mm
	Wheel weight max.	80 kg
	Mains frequency	50/60 Hz
	Mains voltage (AC)	110 - 230 V
	Phases	1
A	Width	1480 mm
B	Depth	1009 mm
C	Height	1697 mm
	Weight	200 kg
	Article number	810003

SPECIFICATIONS

ACCESSORIES

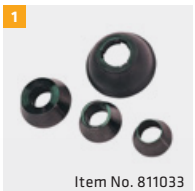
1 Item No. 811033

2 Item No. 811034

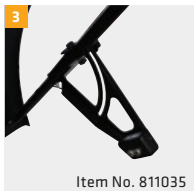
3 Item No. 811035

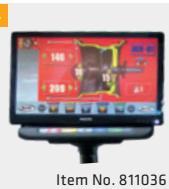
4 Item No. 811036

5 Item No. 811037

6 Item No. 811038

1 Passenger car cone set Ø 44 - 112 mm
2 SUV cone Ø 95 - 132 mm
3 Measuring arm for rim width
4 Keyboard for the touchscreen
5 Laser H12 (dynamic mode)
6 Ultrasonic runout measuring device

Technical changes reserved. Data are considered advertisement.
Wheel Balancers-Librak430P-BR-BRB-126271-en-2020-01

BlitzRotary GmbH | Hüfinger Straße 55 | 78199 Bräunlingen | Germany
Phone +49.771.9233.0 | info@BRBunited.com | BRBunited.com | a DOVER company

Butler